NASA 5020A Requirements for Threaded Fastening Systems in Spaceflight Hardware

Over the last decade, we have done numerous structural and thermal simulations of satellites for commercial and ITAR-type clients. Looking back, I'm sort of surprised how close we got with what we *thought* were FEA best practices for linear dynamics (that is to say, results based on a normal modes analysis from seismic to shock to PSD). A big advance over the last couple of years has been our approach to fastener modeling. In prior work, fasteners were idealized using beams and rigid links, while nowadays, our preference is to use 6-DOF springs in combination with rigid links. While a bit messy, it provides an efficient methodology to meet the NASA 5020A Technical Specification. The gist of the NASA 5020A specification is to keep joints tightly joined under worst-case conditions with no or limited slip. This is done by combining the effects of fastener preload against that of the applied load or loads with conservative assumptions and factors of safety.

The specification is an algebraic joy to the mathematically inclined simulation engineer. In our project work, we were surprised to learn, that without shear pins, it is quite difficult to get a stand-along fastener to pass the NASA 5020A specification. Furthermore, although best practices often calls out maximum bolt preload, it can also lead to failing the 5020A specification. To provide some background, we'll show a simple calculation that we did for a recent space-based optical platform.

Our takeaways from this work is that every fastener loves a shear pin and that high bolt preload is not necessarily your friend.

Summary of NASA 5020A: Use lots of Shear Pins and Low Bolt Preload (If Possible)

Small Satellites are the Rage

NASA 5020A w/CHANGE 1: Bolt Preload

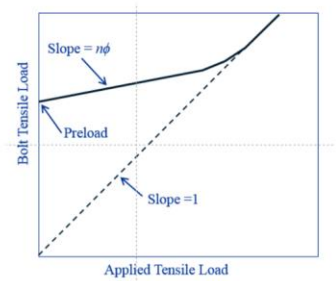

Figure 7—Predicting the Product $n\phi$ from Finite Element Analysis

FEA Model of Fastener

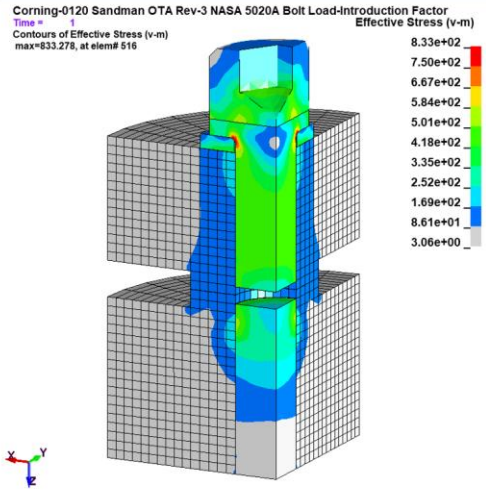

Nonlinear FEA Results: Bolt Preload

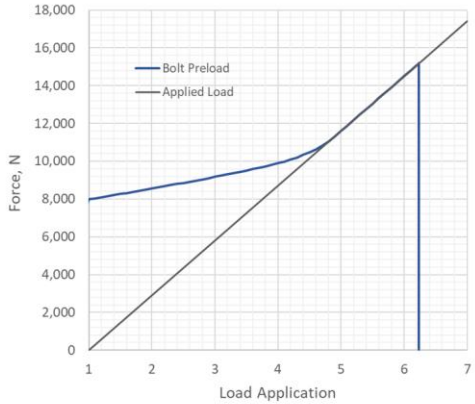

The NASA 5020A specification is written by engineers for engineers. It just takes a methodical read from start to finish. The short version is that it penalizes any threaded fastener that is required to carry axial and shear loads. Hence the trick is to use shear pins and keep the bolt preload low. An example calculation is shown in the following slides.

Summary of NASA 5020A: There is no Simple Path just Hard Calcs

Where to Start

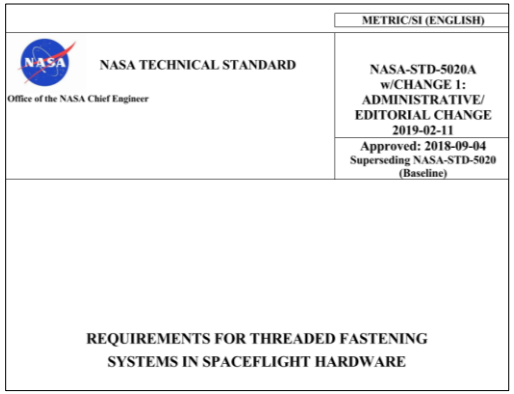

METRIC/SI (ENGLISH)

NASA TECHNICAL STANDARD

Office of the NASA Chief Engineer

NASA-STD-5020A w/CHANGE 1: ADMINISTRATIVE/ EDITORIAL CHANGE 2019-02-11

Approved: 2018-09-04
Superseding NASA-STD-5020 (Baseline)

REQUIREMENTS FOR THREADED FASTENING SYSTEMS IN SPACEFLIGHT HARDWARE

NASA 5020A Step-by-Step

1.) Create spreadsheet and calculate fastener loads via hand calculation or FEA model;
2.) Multiply loads by 1.4x given that failure of most fasteners in space are catastrophic;
3.) Apply fitting factor of 1.15x to loads (another conservatism);
4.) Determine maximum possible fastener diameter and length > 6D;
5.) Specify dual shear pins for significant fasteners;
6.) Run *trial calculations* to specify fastener preload to meet loading requirements;
7.) In many cases, an optimum joint is when the fastener never separates;
8.) Shear pins by Bruhn, Section D1.10 – Methods of Failure of Single Bolt Fitting;
9.) All spreadsheet'able with loads mapped over from FEA.

NASA-STD-5020A w/CHANGE 1

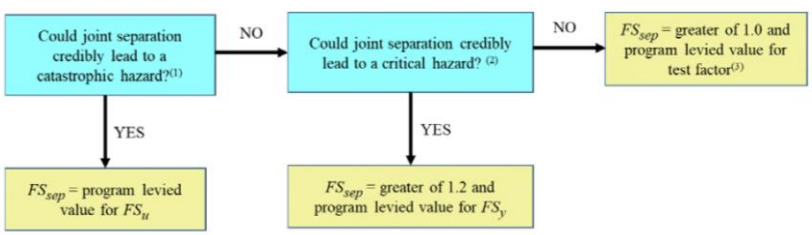

Definitions	NASA 5020A Section 4.4.1
$P_{tu\text{-}allow}$ = allowable ultimate tensile load P_{tL} = limit tensile load (calculated from applied loads to structure – FEA) FF = fitting factor (1.15) FS_u = factor of safety ultimate (1.4) P'_{tu} = see Eq 10, Section 4.4.1	*The margin of safety indicates how much the applied load can increase before the criteria are no longer satisfied. Simplistic equations for calculating the margin of safety for ultimate under axial load are* $MS_u = \frac{P_{tu-allow}}{FF \cdot FS_u \cdot P_{tL}} - 1$ *(Eq. 6)* *when separation occurs before rupture, and* $MS_u = \frac{P'_{tu}}{FF \cdot FS_u \cdot P_{tL}} - 1$ *(Eq. 7)* *when rupture occurs before separation, where P'_{tu} is the applied tensile load that causes the fastener load to exceed the fastening system's allowable ultimate tensile load if rupture occurs before separation, and $P_{tu\text{-}allow}$ is the allowable ultimate load for the fastening system.*

The NASA 5020A Requirements for Threaded Fastening Systems in Spaceflight Hardware provides calculation procedure and large factors of safety that assures that joints stay locked together during flight conditions. Given its conservativeness it creates design challenges for unsuspecting design and simulation engineers. Our takeaway from this FEA consulting project was that shear pins are usually a necessity since the specification aims to ensure no-slip joint conditions and given its conservativeness, this condition is difficult to achieve without the use of shear pins.

NASA 5020A: Trial Calculations – Bolt Preload – It is All Engineering Estimation

Fitting Factor / Preload Variation / ?

Γ = preload variation = 0.35

c_{max} = 1.08 and c_{min} = 0.92

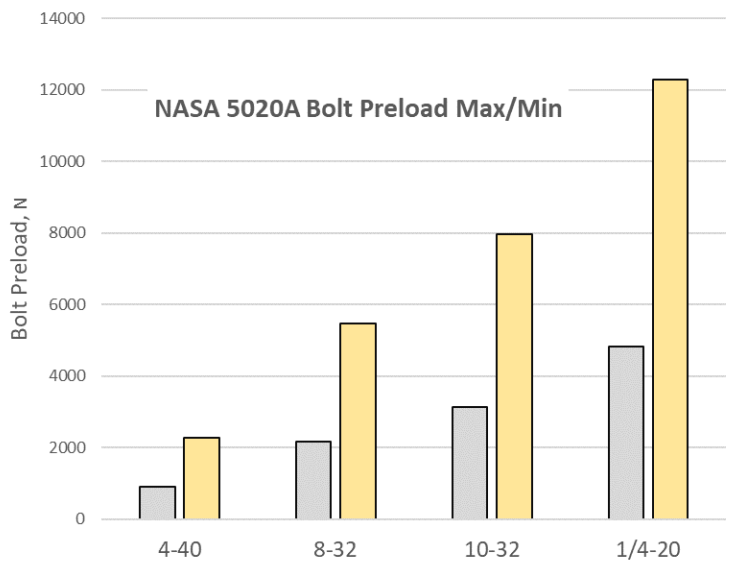

Minimum and Maximum Bolt Preload Formulas

Maximum and minimum preloads are calculated as

$$P_{p-max} = P_{pi-max} + P_{\Delta t-max} \quad \text{(Eq. 1)}$$

$$P_{p-min} = P_{pi-min} - P_{pr} - P_{pc} - P_{\Delta t-min} \quad \text{(Eq. 2)}$$

$$P_{pi-max} = c_{max}(1+\Gamma)P_{pi-nom} \quad \text{(Eq. 3)}$$

$$P_{pi-min} = c_{min}(1-\Gamma)P_{pi-nom} \quad \text{(Eq. 4)}$$

NASA 5020A bolt preload calculation is based on a minimum and maximum approach where the base preload (force) is then modified by an estimated preload variation (Γ) and then installation parameter (c). An example graph is provided showing the how the bolt preload min and max's stack up for fastener sizes from 4-40 to ¼-20. The range between min and max provides a quick insight into why meeting the specification can be difficult.

NASA 5020A: Trial Calculations – Bolt Factor ηφ

FEA Simulation of Fastened Joint

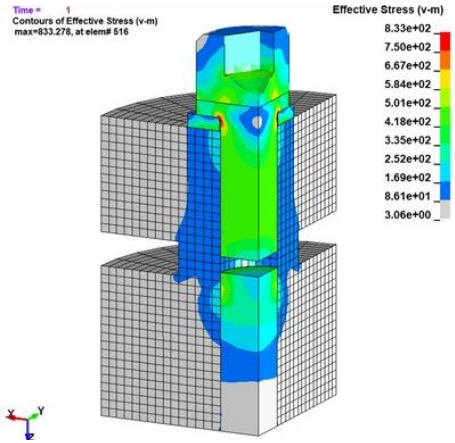

Bolt Preload and Application of Load

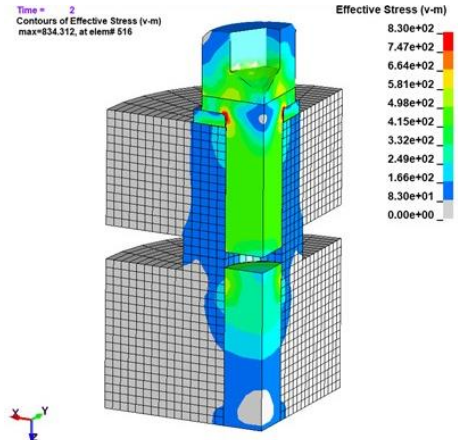

NASA 5020A Bolt Factor Diagram

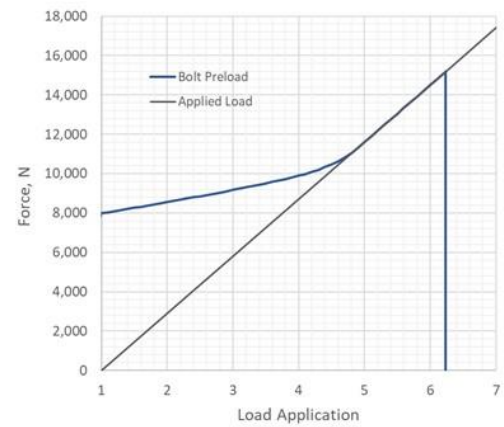

The conclusion is that, for any practical design with $E_c < E_b/3$, $e/D \geq 1.5$, and $n \leq 0.9$, the bolt load increases by no more than 25 percent of the applied tensile load prior to separation.

Definitions	NASA 5020A Section 4.4.1
$P_{tu\text{-}allow}$ = allowable ultimate tensile load P_{tL} = limit tensile load (calculated from applied loads to structure – FEA) FF = fitting factor (1.15) FS_u = factor of safety ultimate (1.4) P'_{tu} = see Eq 10, Section 4.4.1	*The margin of safety indicates how much the applied load can increase before the criteria are nc longer satisfied. Simplistic equations for calculating the margin of safety for ultimate under axial load are* $MS_u = \frac{P_{tu-allow}}{FF \cdot FS_u \cdot P_{tL}} - 1$ *(Eq. 6)* *when separation occurs before rupture, and* $MS_u = \frac{P'_{tu}}{FF \cdot FS_u \cdot P_{tL}} - 1$ *(Eq. 7)* *when rupture occurs before separation, where P'_{tu} is the applied tensile load that causes the fastener load to exceed the fastening system's allowable ultimate tensile load if rupture occurs before separation, and $P_{tu\text{-}allow}$ is the allowable ultimate load for the fastening system.*

Definitions	NASA 5020A, Section 4.4.1 – Ultimate Design Loads
ηϕ = 0.25 (for the current calculation – estimated based on NASA 5020A and FEA models) $P_{p\text{-}max}$ = maximum preload ($P_{pi\text{-}max}$)	*Based on Eq. 8 and the assumption of maximum preload, $P_{p\text{-}max}$, the applied tensile load that causes the bolt load to exceed the allowable ultimate tensile load for the fastening system, P'_{tu}, is* $P'_{tu} = \frac{1}{n\phi}(P_{tu-allow} - P_{p-max})$ *(Eq. 10)* *and the linearly projected load that causes separation when at maximum preload is* $P'_{sep} = \frac{P_{p-max}}{1 - n\phi}$ *(Eq. 11)* *If P'_{sep} is less than P'_{tu}, linear theory predicts that separation would occur before rupture, and the ultimate margin of safety for tensile loading is calculated per Eq. 6. Conversely, Eq. 7 should be used when P'_{sep} is greater than P'_{tu}, as linear theory predicts rupture would occur before separation.*

Calculation of the NASA 5020A bolt factor ηϕ is one of the pure formulaic joys of the spec. The bolt factor determines how easily one can meet the margin of safety (MS_u) requirements in Eq. 6 of Eq. 7. For example, one wants a high value of P'_{tu} which is more easily obtained with a higher bolt factor. However, at the end of the day, one usual defaults to ηϕ = 0.25 and moves on. One will also note that a low bolt preload ($P_{p\text{-}max}$) in relation to the bolt's strength ($P_{tu\text{-}allow}$) favors a higher margin of safety (MS_u).

NASA 5020A: Example Calculation – Margin of Safety

Example Calculation of Margin-of-Safety for 10-32 Fastener

1.) Assembly Mechanical Data, Bolt Preload ($P_{p\text{-}min}$) and Maximum Load (P_{tl})

Fastener	Major Diameter, mm	$P_{ty\text{-}allow}$[1] Yield Strength, N	$P_{tu\text{-}allow}$[1] Ult Strength, N	$P_{pi\text{-}nom}$[4], N	C_{max}[3]$(1+\Gamma)$	$P_{p\text{-}min}$[2], N	$P_{p\text{-}max}$[2], N	P_{tL}, N (PSD_{FEA})
10-32	4.83	15,200	20,100	5,500	1.075(1+0.35)	3,130	7,970	3·1,280

[1] $P_{ty\text{-}allow}$ and $P_{tu\text{-}allow}$ are based on the yield and ultimate strength of the A286 fastener material.
[2] $P_{p\text{-}min}$ and $P_{p\text{-}max}$ are the minimum and maximum bolt preload as calculated using a bolt friction of 0.15 (nut factor = 0.2)
[3] c_{max} = {torque control} (5,260 ± 395) / 5,260 = 1.075 (this factor is based on applied torque in N·mm) and C_{min} = 0.925
[4] $P_{pi\text{-}nom}$ is calculated from the nominal torque. In this example it is 5,260 N·mm

2.) Using the above data, we can determine whether Eq. 6 or Eq. 7 is used to calculate MS_u.
Eq. 10: P'_{tu} = 1/(0.25)(20,200 – 7,980) = 48,900 N, then with Eq. 11: P'_{sep} = 7,970/(1-0.25) = 10,600 N and $P'_{sep} < P'_{tu}$ requiring
Eq. 6: MS_u = 20,200/(1.15·1.4·(PSD_{FEA})) – 1.0 = 2.2, positive ultimate margin of safety and therefore the fastener passes.

The specification provides a robust procedure from fasteners to shear pins. For pull-out and bearing loads, it can be a bit murky but guidance is provided if one keeps digging. Our recommendation is to do a first pass based on MS and then start looking at shear pin requirements.

NASA 5020A: Shear Pin Considerations – Shear and Bearing Loads

Shear Pin Bearing Failure: Nonlinear Potting Material Analysis with LS-DYNA

Bruhn Section D1.10 – Fittings & Connections	Example Calculation
Bushing Yield. Take A_{br} as the smaller of the bearing areas of bushing on pin or bushing on lug. (The latter may be smaller as a result of external chamfer of the bushing, oil grooves, etc.) The allowable yield bearing load on bushing is then, $P_{bry} = 1.85\ F_{cy}\ A_{br}$ - - - - - - - - - - - - (9) where F_{cy} is compressive yield strength of bushing material.	Bushing Yield. $P_{bry} = 1.85\ F_{cy}\ A_{br}$, F_{cy} = 113000 for steel with F_{tu} = 125000. P_{bry} = 1.85 x 113000 x .500 x .375 = 39000 lb. M.S. = (39000/18000) - 1 = 1.17

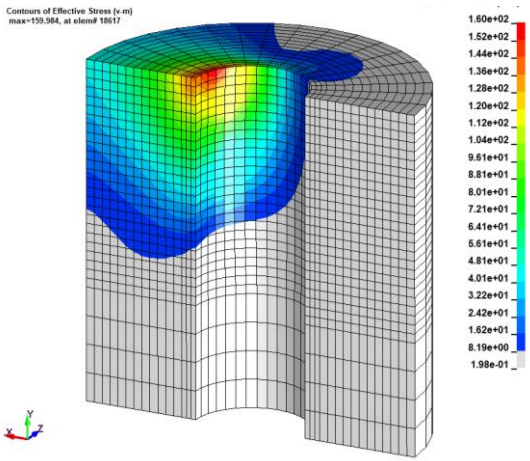

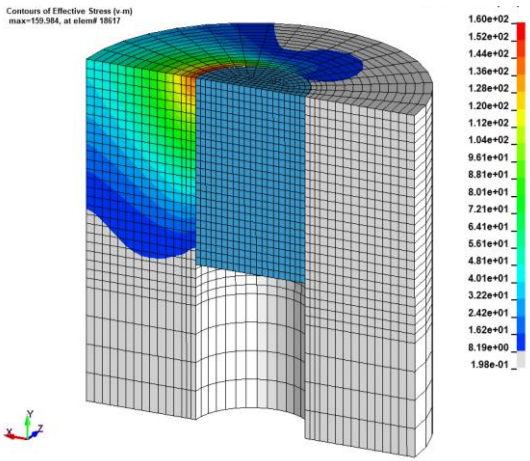

A simplified analysis is provided for the bearing resistance of the potted shear pin per Bruhn, Section D1.10 – Methods of Failure of Single Bolt Fitting and the Allowable Failing Loads. To determine the Bearing Material Failure limit, a nonlinear analysis was performed with the shear pin embedded into the potting material and surrounded by the base. To keep it simple, the analysis work looked at the worst possible shear pin scenario (shear load vs shear pin diameter), results indicated that it would pass.

Mechanical (Static and Dynamic) and Thermal Analysis of Spaceflight Hardware

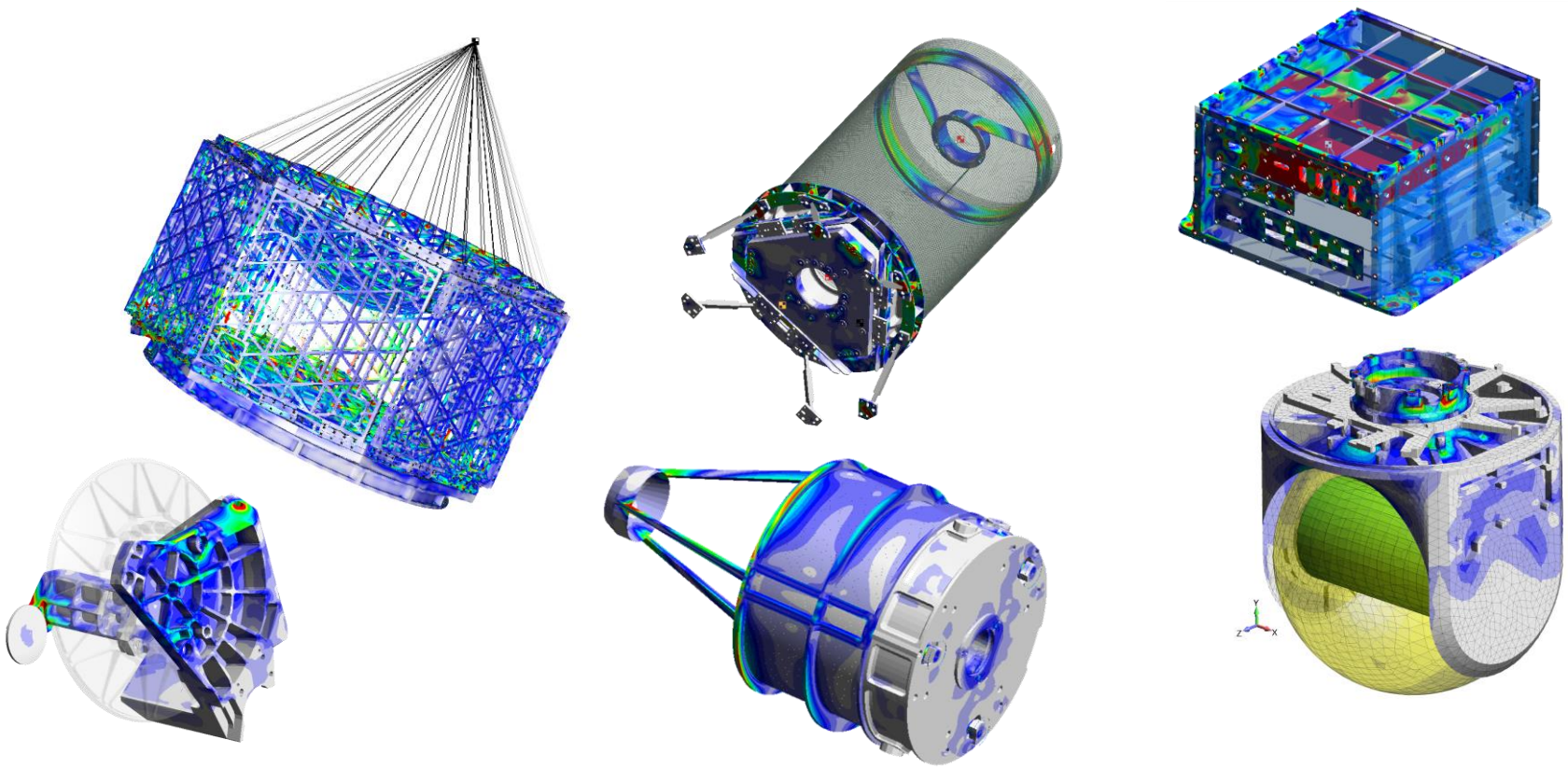

The NASA 5020A Requirements for Threaded Fastening Systems in Spaceflight Hardware specification journey was a fascinating experience. At the end of the project, we had written several application programming interface (API) scripts that would automatically dump FEA static and PSD fastener forces directly into a spreadsheet. With this link, we could then update the spreadsheet and quickly review the Margin of Safety numbers. Given the number of revisions that was required to optimize the fasteners and shear pins, this effort paid off for our client in schedule and budget. As consulting engineers, this project was a pleasure since we learned something new while helping our client deliver an advance micro-sat that passed CDR with nary a comment about fasteners.